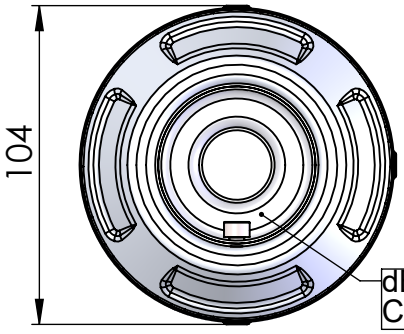

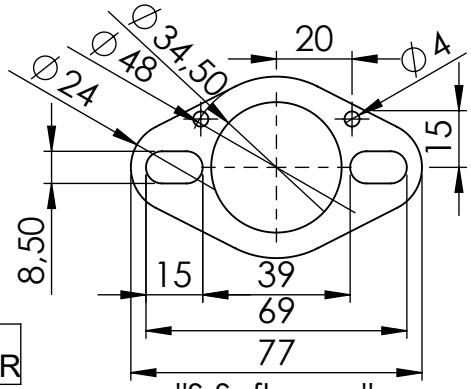

"S.S. flange"
Cod.206443R

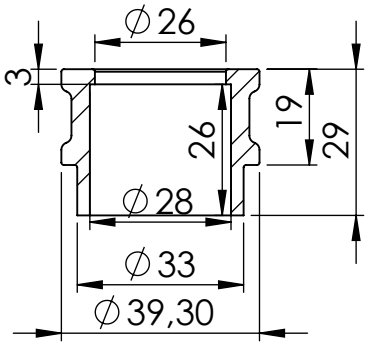

"S.S. Bushing"
Cod.206442R

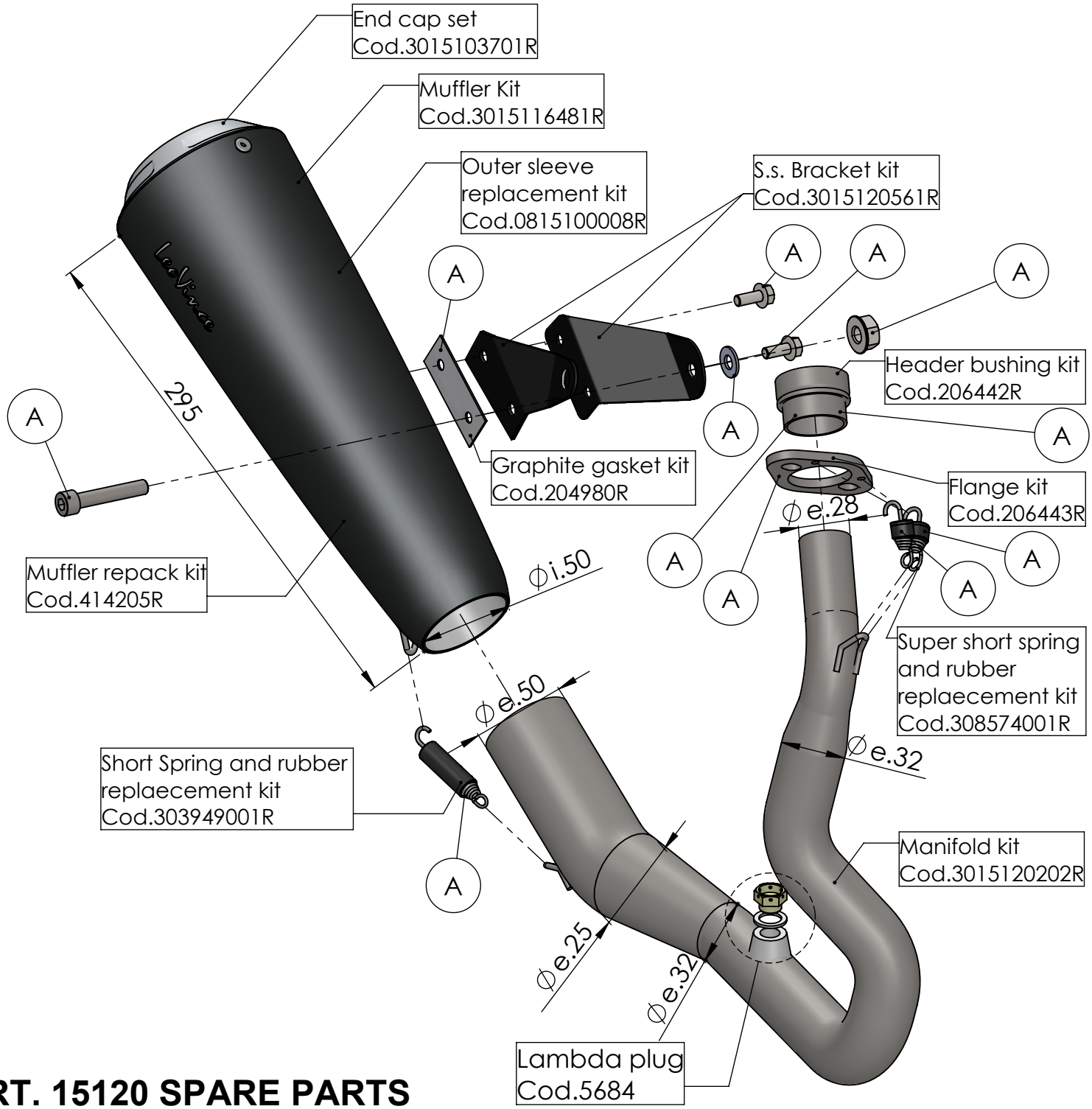

ART. 15120 SPARE PARTS

HONDA CB125R

(A) FITTING KIT Cod. 3015120601R